A.Y. McDonald Mfg. Co.
Under-Lid ERT Mount Assembly Instructions

DISASSEMBLY

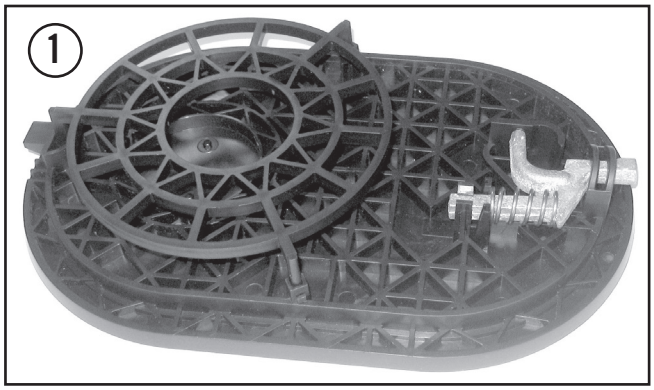

1) A.Y. McDonald Plastic Lids may be provided with the under-mount ERT carriage assembly. When this option is provided, A.Y. McDonald will ship the mounting carriage assembled to the under side of the yokebox lid.

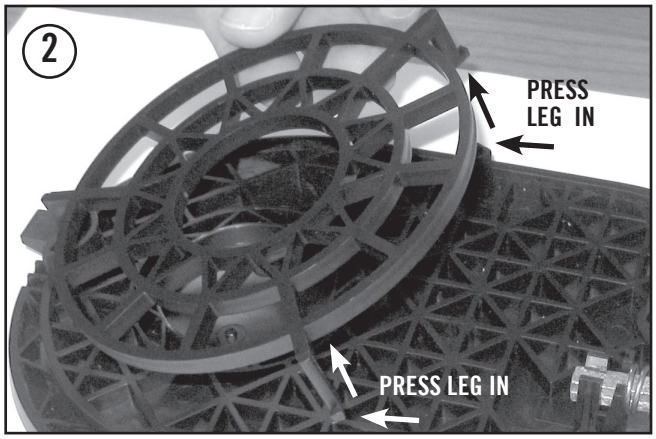

2) To remove the carriage from under side of yokebox lid for ERT attachment, gently apply pressure inward to the two locking legs and pull the carriage assembly slightly upward as pressure is applied.

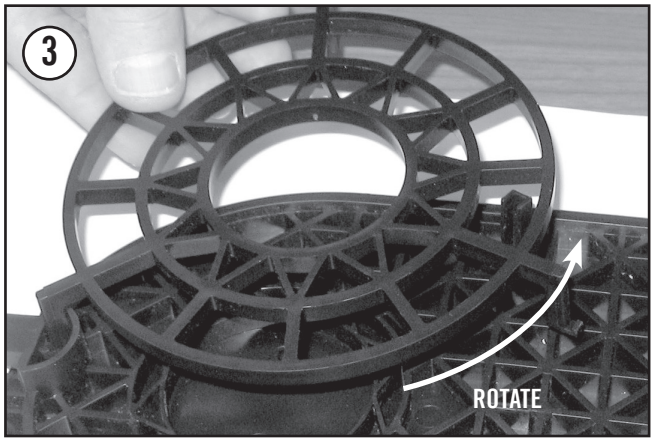

3) Keeping the carriage in a level position, rotate the entire assembly to unlock the third connecting leg. Gently pull upward.

Carriage is now released and reader may be installed through the access hole provided. The sending unit will be installed so the top of the unit is sandwiched between the under side of the lid and the mounting carriage (see Figure 6).

ASSEMBLY

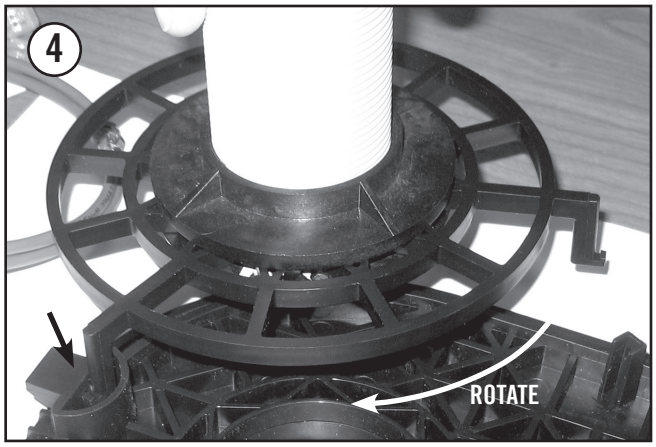

4) Re-installing the ERT carriage is accomplished by simply reversing steps 2 and 3. Insert one locking leg into the "D" shaped lock on the lid. Making sure the nib is aligned with the opening in the "D" shape, rotate the carriage until the legs are aligned with the secondary locks.

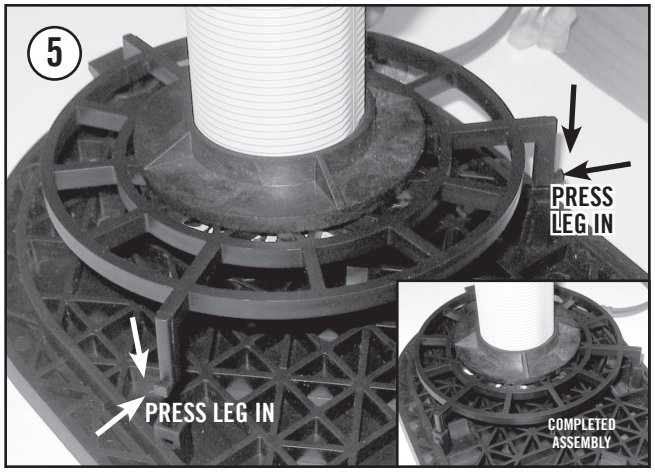

5) With slight inward pressure on each leg, push the carriage assembly down and into the locking position.

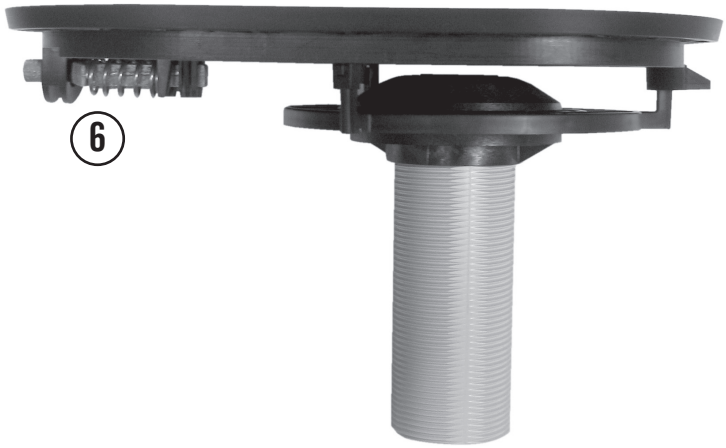

6) Completed assembly will resemble this installation. Reader units will vary.

WARNING: It is unlawful in CALIFORNIA & VERMONT (effective 1/1/2010); MARYLAND (effective 1/1/2012); LOUISIANA (effective 1/1/2013) and the UNITED STATES OF AMERICA (effective 1/4/2014) to use any product in the installation or repair of any public water system or any plumbing in a facility or system that provides water for human consumption if the wetted surface area of the product has a weighted average lead content greater than 0.25%. This prohibition does not extend to service saddles used in California, Louisiana or under USA Public Law 111-380.

800.292.2737 | sales@aymcdonald.com | aymcdonald.com