IMPORTANT NOTICE - READ CAREFULLY

74692 Series CTS Compression to Flare Conversion Coupling
(1 1/2" and 2" Reduced Weight sizes only)

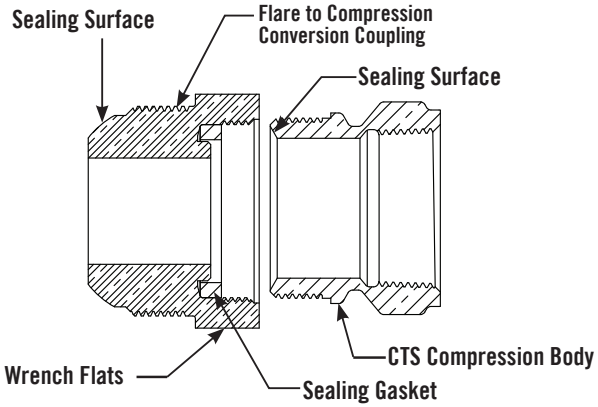

1. The A.Y. McDonald CTS Compression to Flare Conversion Coupling is designed to work only with A.Y. McDonald CTS compression bodies. Using a 74692 series Conversion Coupling on bodies not designed for A.Y. McDonald CTS compression WILL cause failure. If you have any questions as to whether the fitting body is designed for A.Y. McDonald CTS compression, contact A.Y. McDonald Mfg. Co.

2. Prior to installation, remove protective closures and inspect the compression body and conversion coupling to ensure threads and sealing surfaces are free of dirt, nicks, dings, or contaminants that would prohibit a proper seal; in addition, ensure the sealing gasket is properly seated.

3. Assemble conversion coupling to the CTS compression end body (see figure), and tighten to 30-45 ft-lbs.

4. When installing a copper tube/flare nut to the conversion coupling, the assembler must ensure to tighten the flare nut only. A second wrench must be used on the conversion coupling wrenching flat (see figure) to standoff and prevent over tightening/compression of the sealing gasket.

5. Use only on cold water services.

Installation Instructions

IMPORTANT NOTICE - READ CAREFULLY

74692 Series CTS Compression to Flare Conversion Coupling
(1 1/2" and 2" Reduced Weight sizes only)

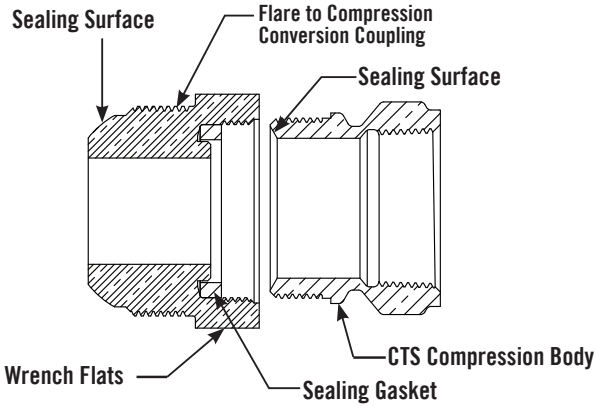

1. The A.Y. McDonald CTS Compression to Flare Conversion Coupling is designed to work only with A.Y. McDonald CTS compression bodies. Using a 74692 series Conversion Coupling on bodies not designed for A.Y. McDonald CTS compression WILL cause failure. If you have any questions as to whether the fitting body is designed for A.Y. McDonald CTS compression, contact A.Y. McDonald Mfg. Co.

2. Prior to installation, remove protective closures and inspect the compression body and conversion coupling to ensure threads and sealing surfaces are free of dirt, nicks, dings, or contaminants that would prohibit a proper seal; in addition, ensure the sealing gasket is properly seated.

3. Assemble conversion coupling to the CTS compression end body (see figure), and tighten to 30-45 ft-lbs.

4. When installing a copper tube/flare nut to the conversion coupling, the assembler must ensure to tighten the flare nut only. A second wrench must be used on the conversion coupling wrenching flat (see figure) to standoff and prevent over tightening/compression of the sealing gasket.

5. Use only on cold water services.

3210-437 800.292.2737 | sales@aymcdonald.com | aymcdonald.com 3/22

IMPORTANT NOTICE - READ CAREFULLY

74692 Series CTS Compression to Flare Conversion Coupling
(1 1/2" and 2" Reduced Weight sizes only)

A.Y. McDonald waterworks products are designed for reliable service. Like all brass products, however, improper handling and use can damage them.

CAUTIONS

1. Protect threads. Avoid loose fitting wrenches. Do not drop or impact.
2. Use extra care with high pressure (over 100 PSIG) and pipe over 1". Consult factory if desired.
3. Inspect and pressure test all joints, valves and fittings before backfilling.
4. Backfill carefully so as to avoid damage to the service line and connections. Looping of the service lines is recommended to minimize strain.
5. DO NOT use Vaseline®, plumber's grease, or any other petroleum-based product on seals or O-rings.

DAMAGE CAUSED BY IMPROPER USE AND/OR HANDLING WILL VOID OUR WARRANTY

WARNING: It is unlawful in **CALIFORNIA & VERMONT (effective 1/1/2010); MARYLAND (effective 1/1/2012); LOUISIANA (effective 1/1/2013) and the UNITED STATES OF AMERICA (effective 1/4/2014)** to use any product in the installation or repair of any public water system or any plumbing in a facility or system that provides water for human consumption if the wetted surface area of the product has a weighted average lead content greater than 0.25%. This prohibition does not extend to service saddles used in California, Louisiana or under USA Public Law 111-380.

Installation Instructions

IMPORTANT NOTICE - READ CAREFULLY

74692 Series CTS Compression to Flare Conversion Coupling
(1 1/2" and 2" Reduced Weight sizes only)

A.Y. McDonald waterworks products are designed for reliable service. Like all brass products, however, improper handling and use can damage them.

CAUTIONS

1. Protect threads. Avoid loose fitting wrenches. Do not drop or impact.
2. Use extra care with high pressure (over 100 PSIG) and pipe over 1". Consult factory if desired.
3. Inspect and pressure test all joints, valves and fittings before backfilling.
4. Backfill carefully so as to avoid damage to the service line and connections. Looping of the service lines is recommended to minimize strain.
5. DO NOT use Vaseline®, plumber's grease, or any other petroleum-based product on seals or O-rings.

DAMAGE CAUSED BY IMPROPER USE AND/OR HANDLING WILL VOID OUR WARRANTY

WARNING: It is unlawful in CALIFORNIA & VERMONT (effective 1/1/2010); MARYLAND (effective 1/1/2012); LOUISIANA (effective 1/1/2013) and the UNITED STATES OF AMERICA (effective 1/4/2014) to use any product in the installation or repair of any public water system or any plumbing in a facility or system that provides water for human consumption if the wetted surface area of the product has a weighted average lead content greater than 0.25%. This prohibition does not extend to service saddles used in California, Louisiana or under USA Public Law 111-380.

3210-437 800.292.2737 | sales@aymcdonald.com | aymcdonald.com 3/22