DuraMAC™

www.aymcdonald.com

A.Y. McDonald Sewage Kit Manual Revised 7-14
3210-475 Rev. D

DuraMAC™

INSTALLATION & OPERATION MANUAL

PREASSEMBLED SEWAGE PUMP SYSTEMS

5050CTSJPAC
5050CTSJPACSDA
5050CTSJPACSL
5050CTSJPAC24
5050CTSJPACDA1

Non-Potable Use Only

This pump has been manufactured with your needs in mind. Properly installed in the right application, your new A.Y. McDonald pump will give you years of carefree performance.

Important Safety Information:

Carefully read and understand all of the Warnings and installation instructions in this manual. Failure to follow these instructions could lead to serious bodily injury and/or property damage. Retain these instructions for future reference.

⚠ DANGER

RISK OF ELECTRICAL SHOCK. Always disconnect the power source before attempting to install, service or perform maintenance on the pump. Failure to do so may result in fatal electrical shock.

⚠ DANGER

RISK OF ELECTRICAL SHOCK. This pump is supplied with a grounding conductor and grounding-type attachment plug. To reduce the risk of electrical shock, be certain that it is connected only to a properly grounded, grounding-type receptacle.

⚠ DANGER

Water and electricity can be dangerous if certain precautions are not adhered to. This pump is designed to operate perfectly safe in a water environment; however, improper use and installation can result in personal harm from electrical shock. Please pay attention to the following warnings.

⚠ DANGER

Never touch any electrical device, including this pump, when it is touching water, in water, or even in a moist environment. Always unplug (disconnect the electricity) when working on or installing the unit.

⚠ DANGER

Keep all electrical connections away from wet and moist environments. Wet connections can cause electrical shock resulting in personal injury.

⚠ DANGER

Do not use this unit to pump chemicals, flammable liquids, sewage or corrosive liquids. You could injure yourself and the pump will fail. Pumping these types of liquids voids the warranty. A.Y. McDonald and other pump companies manufacture pumps for these types of liquids. Make sure you purchase a pump designed for your specific needs. This pump will handle fluids with the same characteristics as water.

⚠ WARNING

Always use a grounded outlet to attach the plug. A three-prong mating type receptacle is needed for safe use. This should be in accordance with the National Electric Code and any additional codes or laws required by your local government.

PARTS LIST

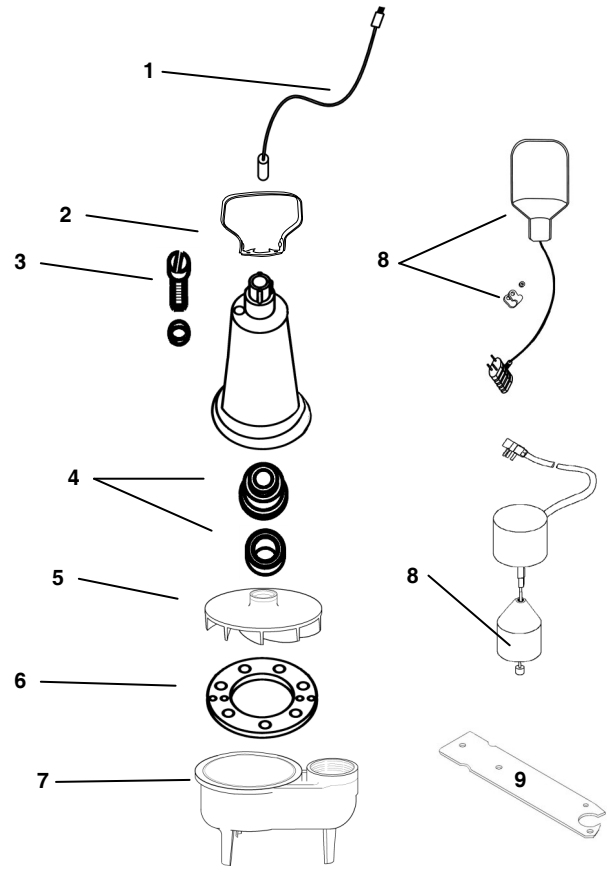

Ref. #	Description	Part # for Models	
		5050CTSJPAC 5050CTSJPACSDA	5050CTSJPACSL 5050CTSJPAC24 5050CTSJPACDA1
1	Power Cord	*Please call your Professional Plumber for price and availability*	
2	Handle		
3	Oil Fill Plug with O-ring		
4	Shaft Seal		
5	Impeller		
6	Gasket		
7	Base		
8	Float Switch		
9	Vertical Float Switch Bracket		

NOTICE

Height and/or piping restriction will reduce the pump output performance. Whenever possible use the same or larger size pipe than the pump discharge for optimum performance. Reducing the pipe size will not harm your pump; it will just slow the flow.

PERFORMANCE CHART

Discharge Height above pumping level						
	0’	5’	10’	15’	20’	25’
GPM	80	68	60	44	13	2
GPH	4800	4080	3600	2640	781	120

SPECIFICATIONS

Power supply requirements	120V, 60 Hz
Motor	Continuous Duty, Capacitor Start
Amps	7.6
Horsepower	½ HP
Liquid Temperature Range	32°F - 120°F
Circuit Requirements	15 amp
Discharge Size	2”
Solids Handling	2”

⚠WARNING

It is strongly recommended to use a ground fault interrupt device on any electrical appliance, including this pump, when used in a wet or moist environment. This GFCI (ground fault circuit interrupter) should be listed by Underwriters Laboratories (UL). This is required by many local codes and enforcement agencies. It is strongly recommended by A.Y. McDonald as it provides a much safer installation and will greatly reduce possible injury from electrical shock.

⚠CAUTION

Do not use the power cord or discharge hose to carry or handle the pump. Doing so may cause damage to the power cord or discharge hose. Use the carrying handle supplied with the pump.

⚠CAUTION

EXTENSION CORDS: For best performance, it is recommended to connect the power cord directly to the grounded GFCI outlet. If the use of an extension cord is necessary, always use a grounded waterproof type cord. Never use longer than a 25-ft. cord that is lighter than 14/3 gauge.

⚠CAUTION

A qualified electrician must perform all wiring.

NOTICE

Your pump has thermal over-load protection built in. It is not recommended for pumping liquids over 120°F. The thermal overload protector will automatically shut down the pump in an overheat situation. It will then reset itself once the pump cools down. The pump will then work again. This overload is designed as a safety device and it will fail after repeated use. Normal operation is for fluids between 32°F & 120°F.

NOTICE

DO NOT RUN THE PUMP DRY. The pump depends on water for cooling and lubrication. Operating the pump without water may cause the motor to overheat or cause damage to parts of the pump. It may also shorten the life of your pump.

USE AND INSTALLATION

Your pump is designed and built to give you reliable performance and long life. It will pump water automatically for years when properly installed in the right environment.

REMOVING OLD PUMP. (If necessary)

1. Make sure power supply is disconnected.
2. After the power is off, remove the old pump. There are many different possible types of installations.

It is best to remove all old piping and start over with new piping. Be sure to clean all debris and dirt out of the sump basin before installing your new pump.

Be sure to have a grounded 120V AC outlet mounted within 6 ft. of your sump basin.

Again, it is highly recommended that a GFCI (ground fault circuit interrupter) outlet be installed in the receptacle box.

INSTALLATION (New Pump)

1. Set your new pump in the bottom of the basin off to one side. The pump should be placed on a solid foundation.

2. Make sure the float switch will swing freely from the bottom to top without coming in contact with the side of the basin. A minimum of 1" clearance is recommended. Contact with the side of the basin may cause the switch not to operate properly and malfunction. See figure below.

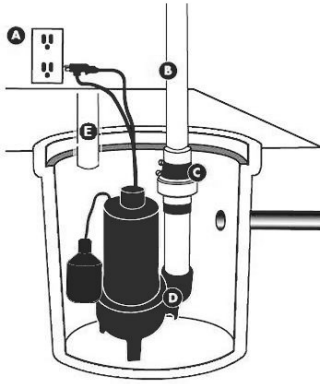

A. Grounded Outlet. A GFCI outlet is strongly recommended.
B. Discharge Pipe
C. Full-flow swing type check valve
D. Position pump so the float switch operates freely without touching the sides of the basin.
E. Vent Pipe

3. Install a full flow, swing type check valve (not included) as close to the discharge outlet on the pump as possible. A new check valve will greatly increase the life of your pump, and should be the same size as the pump discharge, in this case 2".

4. Connect the pump and check valve together using schedule 40 (recommended) DWV pipe and fittings.

5. Test your installation after you have completed setting up the pump and connected all piping. First, plug the piggyback plug from the float switch in to the grounded outlet. Next, plug the power cord from the pump into the piggyback plug on the float switch. The pump should not run at this point. If the pump runs, the switch is stuck in the upright position or the pump is plugged directly into the outlet and not through the piggyback switch plug. Fill the basin with water using buckets or a hose. When the switch floats to the upright position, the pump will turn on. The switch will turn off the pump when it reaches the down position. The switch is set at the factory to turn on at 14" and off at 6". You may adjust the switch to meet your particular needs. Remember the switch must swing freely without touching the sides of the sump basin.

⚠ WARNING

Sewage and effluent can develop dangerous and harmful fumes. For safe and secure operation in this environment it is required to use schedule 40 pipe or heavier. This is required by the UPC (Universal Plumbing Code) and is for your safety.

⚠ WARNING

Besides the fact that it smells terrible, the fumes developed by sewage and effluent can be very dangerous to your health, even fatal.

⚠ WARNING

In a sewage/effluent installation use only an approved tank that is totally sealed and approved for that use by the manufacturer. The UPC (Universal Plumbing Code) requires it. Your pump will provide you with safe and reliable service when installed in the correct environment. IF YOU ARE UNSURE, contact your local code authority or supplier.

⚠ DANGER

RISK OF ELECTRICAL SHOCK. Always disconnect the power source before attempting to install, service or perform maintenance on the pump. Failure to do so may result in fatal electrical shock.

TROUBLESHOOTING

PROBLEM	POSSIBLE CAUSES	HOW TO CORRECT
If the pump does not start or run	Pump is not plugged in, switch or breaker is off	Plug pump in or turn on switch/breaker
	Check for blown fuses or tripped circuit breakers or tripped GFCI outlets	Replace fuse, reset breaker, reset GFCI outlet
	Float switch is defective	Check and replace if necessary
	Motor thermal protector tripped	Allow pump to cool. Pump will reset
	Float switch is stuck or obstructed	Remove obstruction or position pump so it will not become stuck
The pump starts and stops too often	Backflow of water from discharge hose/pipe	Install or replace check valve
	Float switch is defective	Replace float switch
If the pump runs but moves little or no water	Clogged discharge hose/pipe	Remove clog
	Frozen discharge hose/pipe	Allow hose/pipe to thaw
	Pump is air locked	Clean out airlock hole with a paper clip or pipe cleaner
	Low line voltage	Check wire size and increase if necessary
	Check valve is stuck in the closed position	Inspect, repair or replace if necessary
	Check valve is installed backwards	Make sure check valve is installed in the correct direction of flow
	Worn, damaged or clogged pump parts	Inspect for wear, damage or clog and clean or replace if necessary
	Discharge head exceeds pump capacity	If pumping height is over 25', the pump will not move water. See performance chart
Pump does not shut off	Float switch is obstructed or stuck	Remove obstruction
	Defective Float Switch	Replace switch